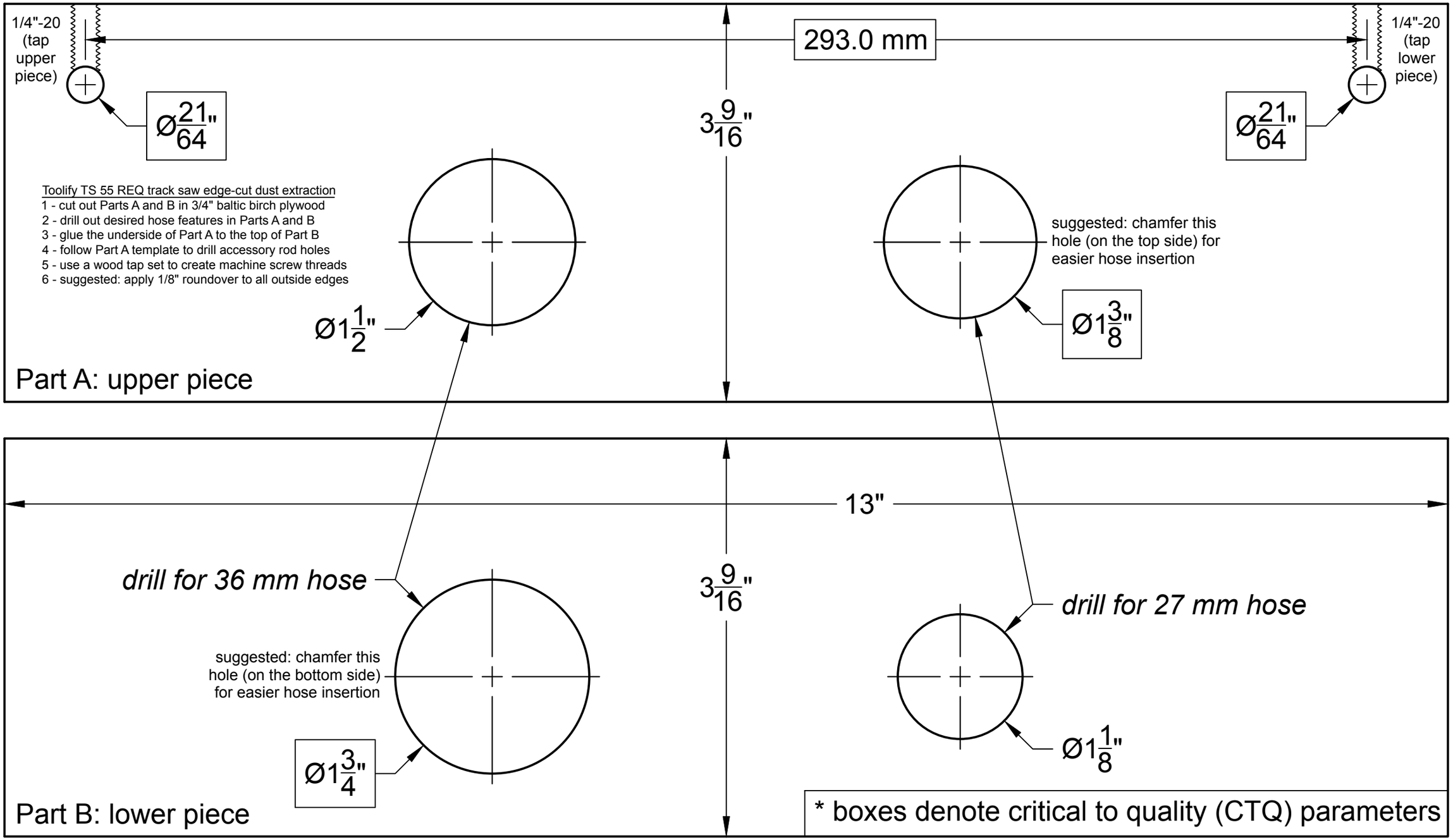
1/4"-20 (tap upper piece)
293.0 mm
1/4"-20 (tap lower piece)
Ø21/64"
3 9/16"
Ø21/64"
Toolify TS 55 REQ track saw edge-cut dust extraction
1 - cut out Parts A and B in 3/4" baltic birch plywood
2 - drill out desired hose features in Parts A and B
3 - glue the underside of Part A to the top of Part B
4 - follow Part A template to drill accessory rod holes
5 - use a wood tap set to create machine screw threads
6 - suggested: apply 1/8" roundover to all outside edges
suggested: chamfer this hole (on the top side) for easier hose insertion
Ø1 1/2"
Ø1 3/8"
Part A: upper piece
13"
drill for 36 mm hose
3 9/16"
drill for 27 mm hose
suggested: chamfer this hole (on the bottom side) for easier hose insertion
Ø1 3/4"
Ø1 1/8"
Part B: lower piece
* boxes denote critical to quality (CTQ) parameters